Experiment–8: Comparison of Transistor Amplifiers

Introduction to Electronics Laboratory (EC2P001)

Electronics and Communication Engineering Group
School of Electrical Sciences, IIT Bhubaneswar

Autumn Semester 2023

Agenda of the Experiment

In this experiment, we will compare various transistor amplifiers:

- Build and observe the voltage gains for CB, CC, and CE amplifiers as mentioned in Part 1, Part 2, and Part 3.
- Derive the gains of each amplifier theoretically and compare them with the measured gains.
- Simulate all the circuits in LTSPICE and verify the results.
- Design of a CE amplifier for given specifications.

Part 1: Common Base Amplifier

1. Wire up the circuit as shown in the following diagram.

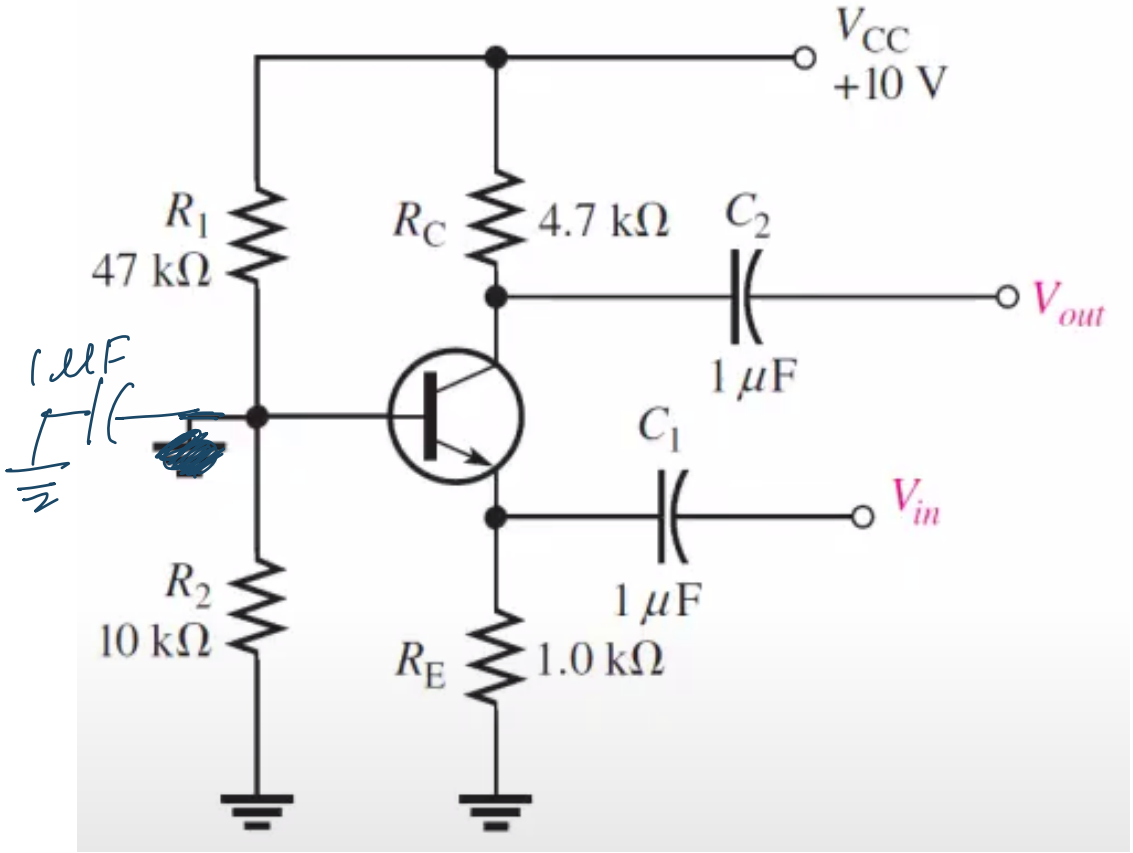

2. Apply 1Khz frequency and 10mv Vp-p Sine wave from a function generator.

3. Observe input and output waveforms simultaneously on the oscilloscope and calculate the voltage gain.

4. Wire up the circuit as shown in the following diagram.

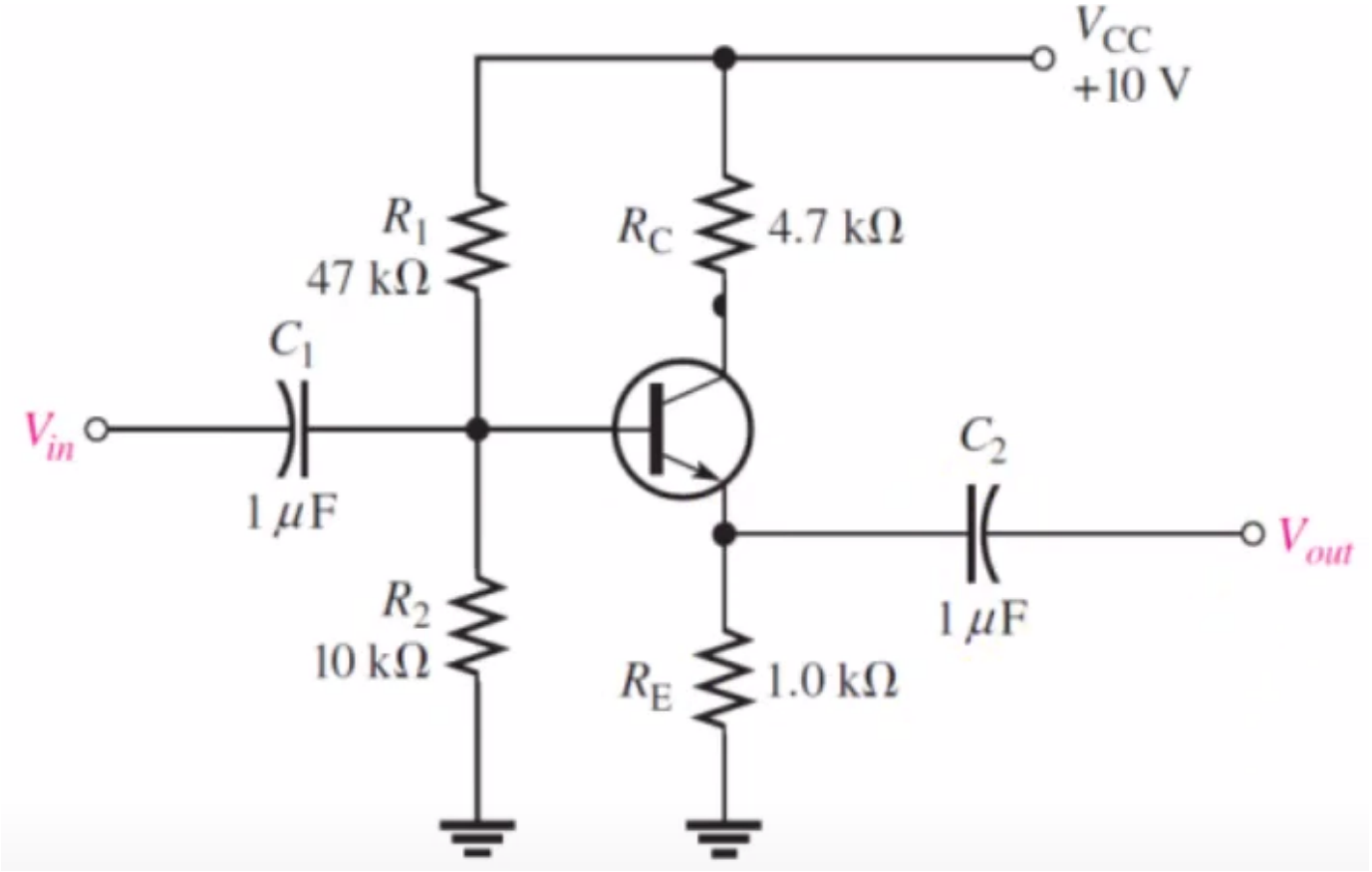

5. Apply 1Khz frequency and 10mv Vp-p Sine wave from a function generator.

6. Observe input and output waveforms simultaneously on the oscilloscope and calculate the voltage gain.

7. Wire up the circuit as shown in the following diagram.

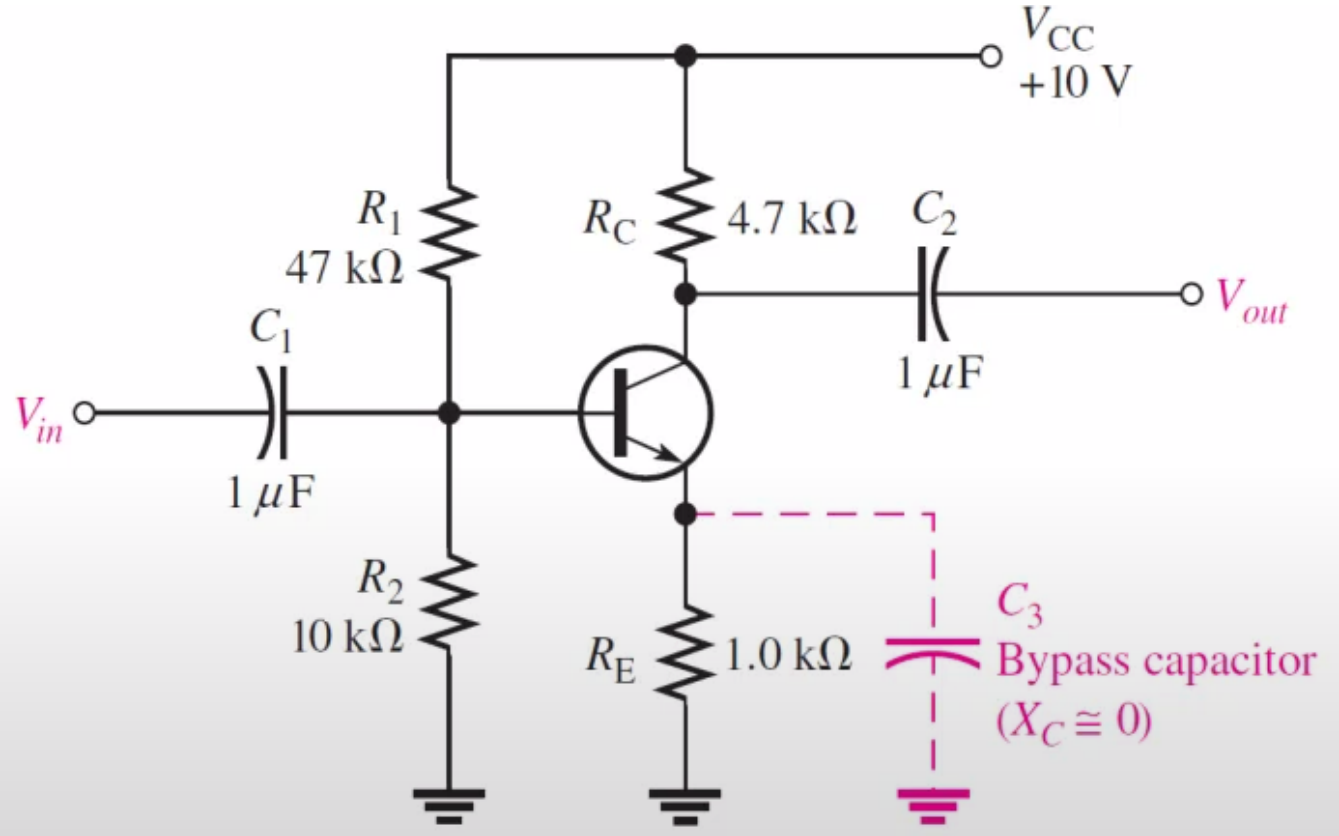

8. Apply 1Khz frequency and 10mv Vp-p Sine wave from a function generator.

9. Observe input and output waveforms simultaneously on the oscilloscope and calculate the voltage gain.

Part 3: Common Emitter Amplifier

10. Add a 100 bypass capacitor in parallel to R_E. Display output and input waveforms on the oscilloscope and calculate the voltage gain.
11. Compare the gain obtained in Step 9 and Step 10 and explain the reasons for the difference.
12. Comment/Compare the voltage gains of each configuration after finishing Part 1, Part 2, and Part 3.

13. Design a CE amplifier with self-bias with emitter by a capacitor with the following parameters: $V_{cc} = 12V, A_v = 50, I_C = 2mA$.

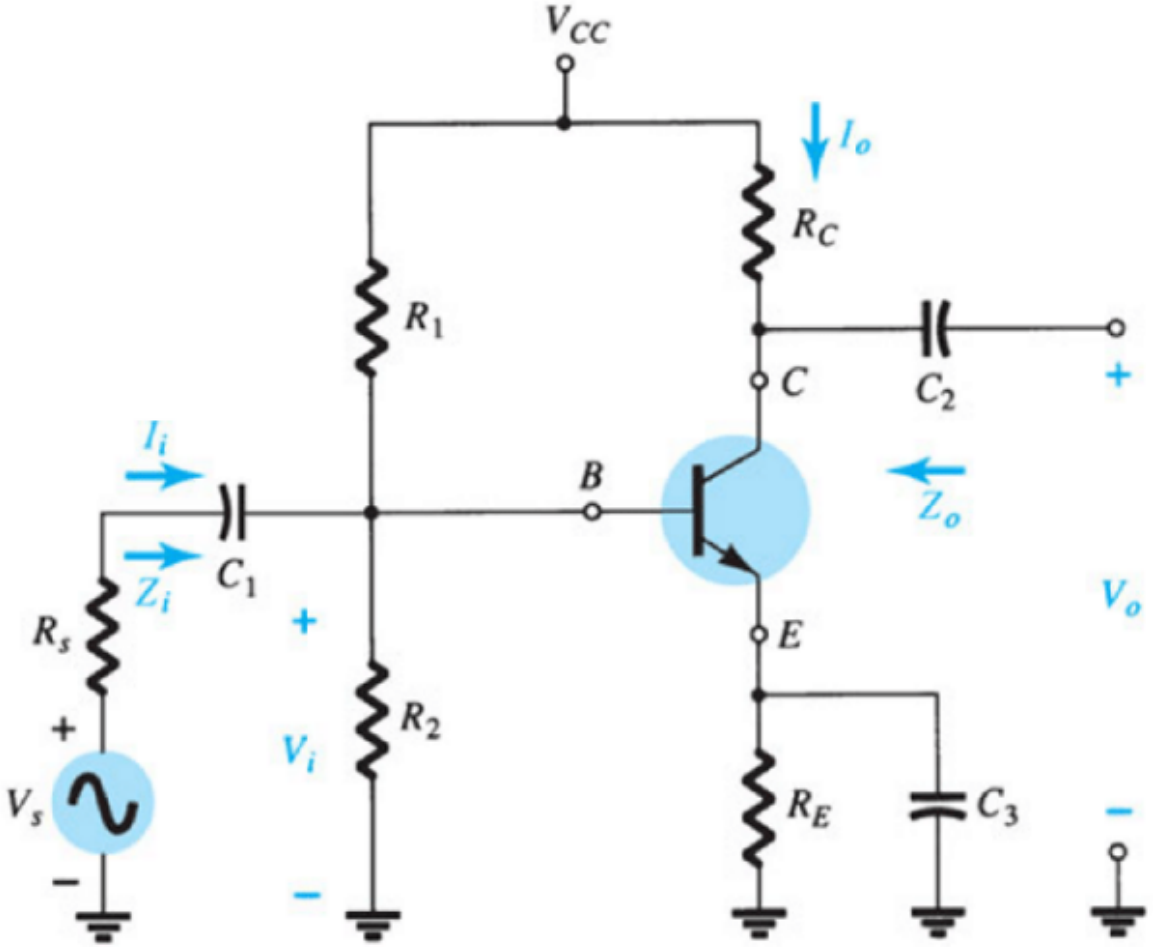

14. Verify the gain experimentally.

What You Should Report

Your report should contain:

- All waveforms, observation tables, and measured values wherever asked.
- All theoretical calculations.
- LTSPICE Simulation results.
- A comparison table showing theoretical, simulated, and observed (measured) gains.
- Theoretical design procedure of CE amplifier design.

Happy Learning by Doing!